User's Guide
SLOU299–December 2010

TAS5727 25W Digital Input Amplifier with EQ and 2-Band DRC

This manual describes the operation of the TAS5727EVM to evaluate the performance of the TAS5727 integrated digital audio power amplifier. The main contents of this document are:

- How to properly connect a TAS5727 Evaluation Module (EVM) and the details of the EVM
- How to install and use the GUI to program the TAS5727EVM
- How to use the audio processing features such as EQ and Dynamic Range Control (DRC)
- Quick-Start Guide for the common modes in which TAS5727EVM can be used

Contents

1 Overview 2
  1.1 TAS5727EVM and MC57xxPSIA Features 3
2 Installation 3
  2.1 EVM Installation 3
  2.2 Software Installation 5
3 Using the EVM Software 8
  3.1 Connect the GUI to the EVM 8
  3.2 I²C Memory Tool 8
  3.3 Volume Function 9
  3.4 Biquad GUI 9
  3.5 DRC GUI 10
4 Jumpers and Control Utilities on MC57xxPSIA board 13
  4.1 RCA/OPTICAL Jumpers 13
  4.2 Switches 13
  4.3 LED Indicators 13
5 Board Layouts, Bill of Materials, and Schematic 14
  5.1 TAS5727EVM and MC57xxPSIA Board Layouts 14
  5.2 Bill of Materials 15
  5.3 Schematics 16

List of Figures

1 TAS5727EVM Printed-Circuit Board 2
2 Complete System and EVM Signal Path Overview 2
3 General Connection Picture 3
4 Connecting TAS5727EVM to MC57xxPSIA 4
5 BTL Connection 5
6 Process Structure 7
7 Main GUI Display 8
8 Memory Tool Window 8
9 Volume Control 9
10 Selecting Biquad GUI 9
11 Biquad GUI Window 10

Equibit is a trademark of Texas Instruments.
I²C is a trademark of Philips Corporation.

Copyright © 2010, Texas Instruments Incorporated

12 DRC Options 11
13 Advanced DRC Options 11
14 TAS5727EVM Top Composite Assembly 14
15 MC57xxPSIA Top Composite Assembly 14

List of Tables

1 Recommended Power Supplies 4
2 Bill of Materials for TAS5727EVM 15

1 Overview

The TAS5727EVM evaluation module demonstrates the TAS5727 device from Texas Instruments. The TAS5727 combines a high-performance PWM processor with a class-D audio power amplifier. This EVM can be configured with two bridge-tied loads (BTL) (2.0). For detailed information about the TAS5727EVM device, review the (device data sheet SLOS670). The Pulse Width Modulator (PWM) is based on TI's Equibit™ technology. The TAS5727 has additional audio processing features like 3D, Bass Boost and 2-band DRC.

The EVM software, with its graphic user interface (GUI), facilitates evaluation by providing access to the TAS5727EVM registers through a USB port. See the *Using the EVM Software* section for further details.

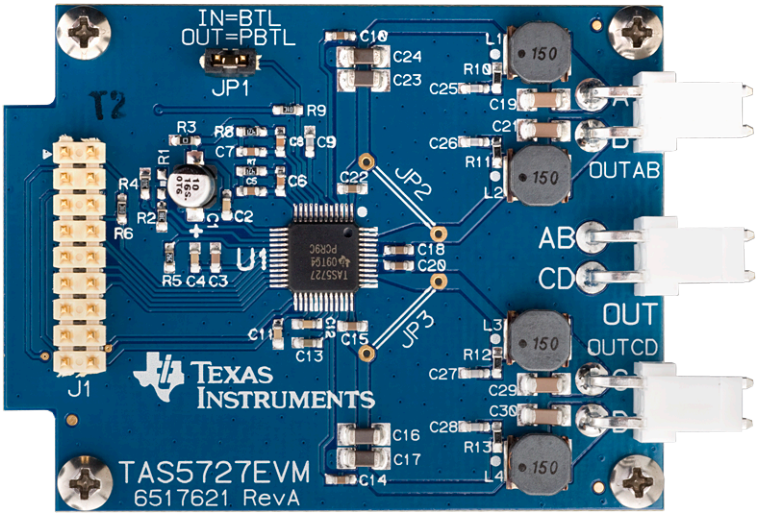

Figure 1. TAS5727EVM Printed-Circuit Board

The EVM together with other TI components on this board, is a complete 2.0-channel digital audio amplifier system. The MC57XXPSIA Controller board includes a USB interface, a digital input (SPDIF), analog inputs via the ADC, power inputs, and other features like a mute function and power down.

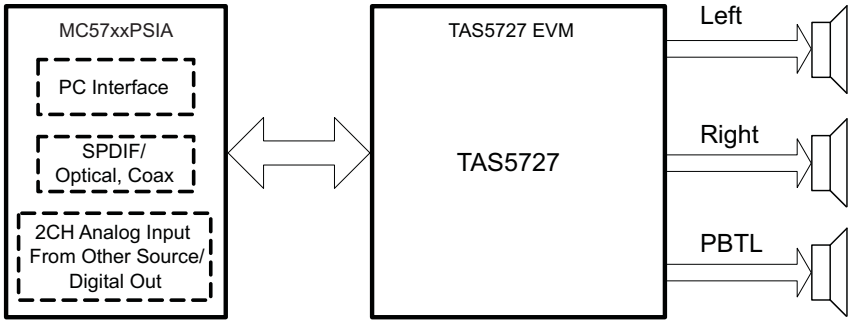

Figure 2. Complete System and EVM Signal Path Overview

Copyright © 2010, Texas Instruments Incorporated

1.1 TAS5727EVM and MC57xxPSIA Features

- Channel evaluation module design
- Self-contained protection systems and control pins
- USB interface
- Standard I^2S data input using optical or coaxial inputs
- Analog input through analog-to-digital converter
- Subwoofer connection—the PWM terminal provides the PWM signal and power to an external subwoofer board
- Double-sided, plated-through PCB, 1oz copper, 2mm
- Access to control signal gain and data format through EVM-software GUI

2 Installation

This section describes the EVM and software installation.

2.1 EVM Installation

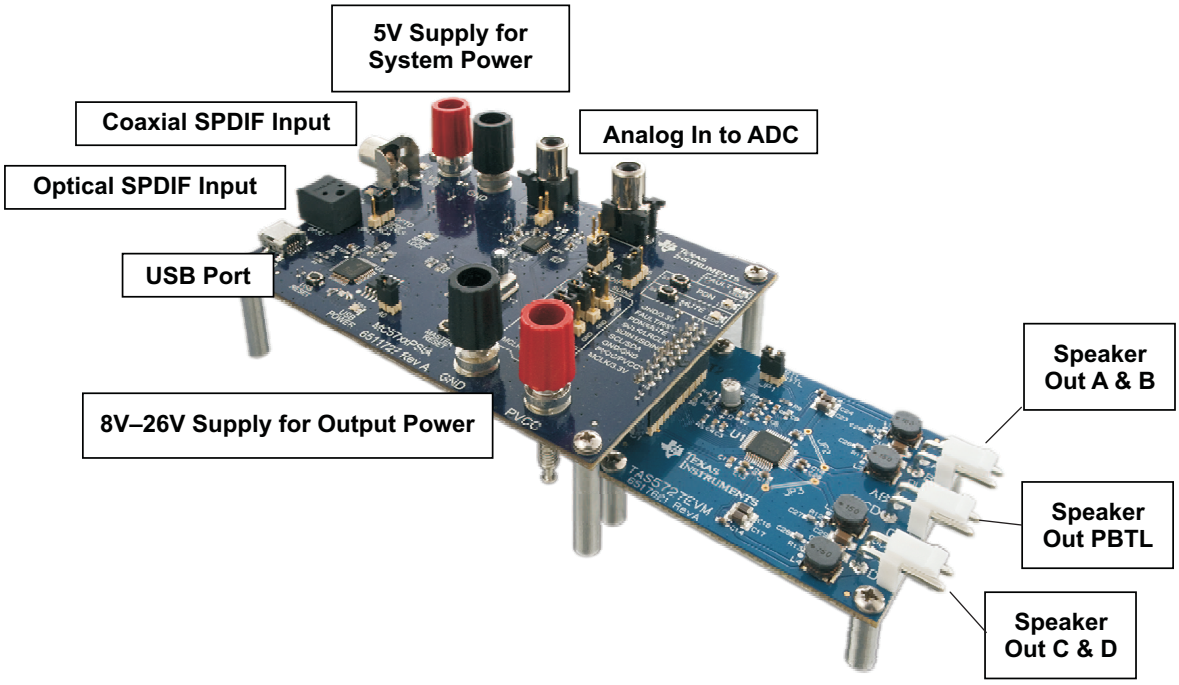

Figure 3. General Connection Picture

The following are the basic tools for the initial EVM power up.

- 5V, 1A power supply (VIN)
- 8–26V, 4A power supply (PVDD)
- Banana-plug test leads for power supplies and speakers
- Optical or coaxial cable for SPDIF interface based on signal source
- USB cable
- EVM software
- Two 8Ω speakers or loads

The following sections describe the TAS5727EVM board in regards to power supply (PSU) and system interfaces.

Copyright © 2010, Texas Instruments Incorporated

2.1.1 Connecting the TAS5727EVM to MC57xxPSIA

On the right side of the MC57xxPSIA is a terminal block and another on the left of the TAS5727EVM (labeled J1). Carefully place the MC57xxPSIA block above the TAS5727EVM block and gently push down.

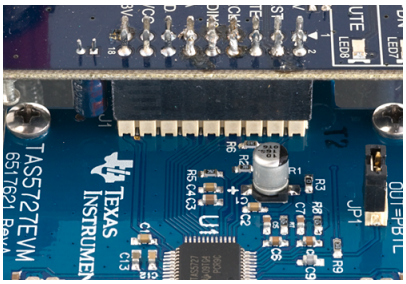

Figure 4. Connecting TAS5727EVM to MC57xxPSIA

2.1.2 PSU Interface

The TAS5727EVM is powered by two power supplies connected to the MC57xxPSIA controller board: a 5V power supply (VIN), and a 8V-to-26V (PVDD) power supply. The 3.3V level is generated from the 5V supply by an on-board voltage regulator.

NOTE: The power-supply cable length must be minimized. Increasing the length of the PSU cable increases the distortion of the amplifier at high output levels and low frequencies.

The maximum output-stage supply voltage depends on the speaker load resistance. See the recommended maximum supply voltage in the TAS5727EVM data sheet.

Table 1. Recommended Power Supplies

Description	Voltage Limitations (8-Ω Load)	Current Recommendations
System power supply	5V	1A
Output power stage supply	8–26V	4A[(1)]

(1) The rated current corresponds to two channels, full scale.

2.1.3 Loudspeaker Connectors

CAUTION

All speaker outputs are biased at Vcc/2 and must not be connected to ground (e.g., through an oscilloscope ground).

Loudspeaker connections vary by device setup. When connecting a speaker in BTL mode, connect the speaker's two terminals (A and B or C and D) across two outputs on the TAS5727EVM.

Speakers or loads can be connected to the outputs A-D with clip leads, or cables can be made with female connectors (JST VHR-2N) that can mate to male connectors on the EVM board.

Copyright © 2010, Texas Instruments Incorporated

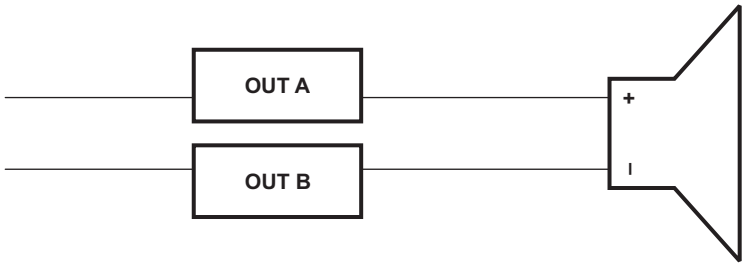

Figure 5. BTL Connection

2.1.4 USB Interface

The TAS5727 registers are accessed through I^{2}C™ bus lines SDA and SCL. The USB circuit and USB connector on the MC57xxPSIA board facilitates the connection between a host computer and the device. The EVM USB circuit is powered by the 5V USB line of the host PC and is independent of the power supplies available on the board. The USB device that is used is a TAS1020B from Texas Instruments.

2.1.5 Digital Audio Interface SPDIF

The Digital Audio Interface SPDIF (RCA/OPTO) accepts digital audio data using the I^{2}S protocol. See the TAS5727 data sheet for more information.

The RCA connector and the OPTO connector are the two SPDIF interfaces on the MC57xxPSIA board. The switch S3 toggles between the OPTO and RCA connector to accommodate the signal source. When the RCA cable or optical cable is connected and the signal source is powered up, verify that the SPDIF lock indicator (blue LED5) illuminates, confirming that a viable signal is available to the device. Install a jumper on JP4 across the middle pin and the pin marked SPDIF to connect the digital source to SDIN1. Install a jumper on JP5 to connect the digital source to SDIN2.

For detailed information on how the data and clocks are provided to the TAS5727, see the schematic appearing at the end of this document and the DIR9001 device data sheet (SLES198).

2.1.6 ADC Interface

In the absence of a digital signal source, the PCM1808 ADC can be used to convert an analog audio signal to a digital signal to the TAS5727. The DIR9001 still provides clock signals to the ADC in this process. A 12MHz crystal is installed on the MC57xxPSIA board. The ADC is an additional feature of this board to provide flexibility in sourcing an audio signal to the TAS5727. Review the PCM1808 data sheet (SLES177) for a detailed description of the ADC on this EVM. Install the jumper on JP4 across the middle pin and the pin marked ADC to select ADC as the source for SDIN1.

2.1.7 Board Power-Up General Guidelines

Connect theMC57xxPSIA and the TAS5727EVM boards by locating pin 1 on each board, indicated by a small white triangle. TheMC57xx plugs down onto the TAS5727EVM board (i.e., the TAS5727EVM board fits underneath the MC57xxPSIA board). Pin 1 on each board must be connected to each other.

Install the EVM software on the PC before powering up the board. After connecting the loudspeakers or other loads, power supplies, and the data line, power up the 5V power supply first; then power up the PVDD power supply. It is recommended initially to set the PVDD level to 10V, then ramp it up to 20V to verify cable connections.

2.2 Software Installation

Download the TAS57x UI from the TI Web site. The TI Web site always has the latest release and any updates to versions of the GUI.

Copyright © 2010, Texas Instruments Incorporated

Execute the GUI install program, Setup.exe. Once the program is installed, the program group and shortcut icon is created in Start → Program → Texas Instruments Inc → TAS57x UI. The GUI launches as shown in Figure 7.

The TAS5717 tab opens when the GUI starts. Select Devices → TAS57XX → TAS5727 to open the TAS5727 tab. This tab has two subwindows. One shows the Process Flow window. From the Process Flow window, each of the signal-processing function tools can be selected by clicking on it. The Biquad GUI and the DRC GUI can be opened by right-clicking. This window also shows Input select, Mode select, Channel, and Master Volume. All functions are shown in the same order as in the device.

The other subwindow, the Properties window, has the properties that a user can update by selecting from the available options. The properties available depend on the device selected.

Copyright © 2010, Texas Instruments Incorporated

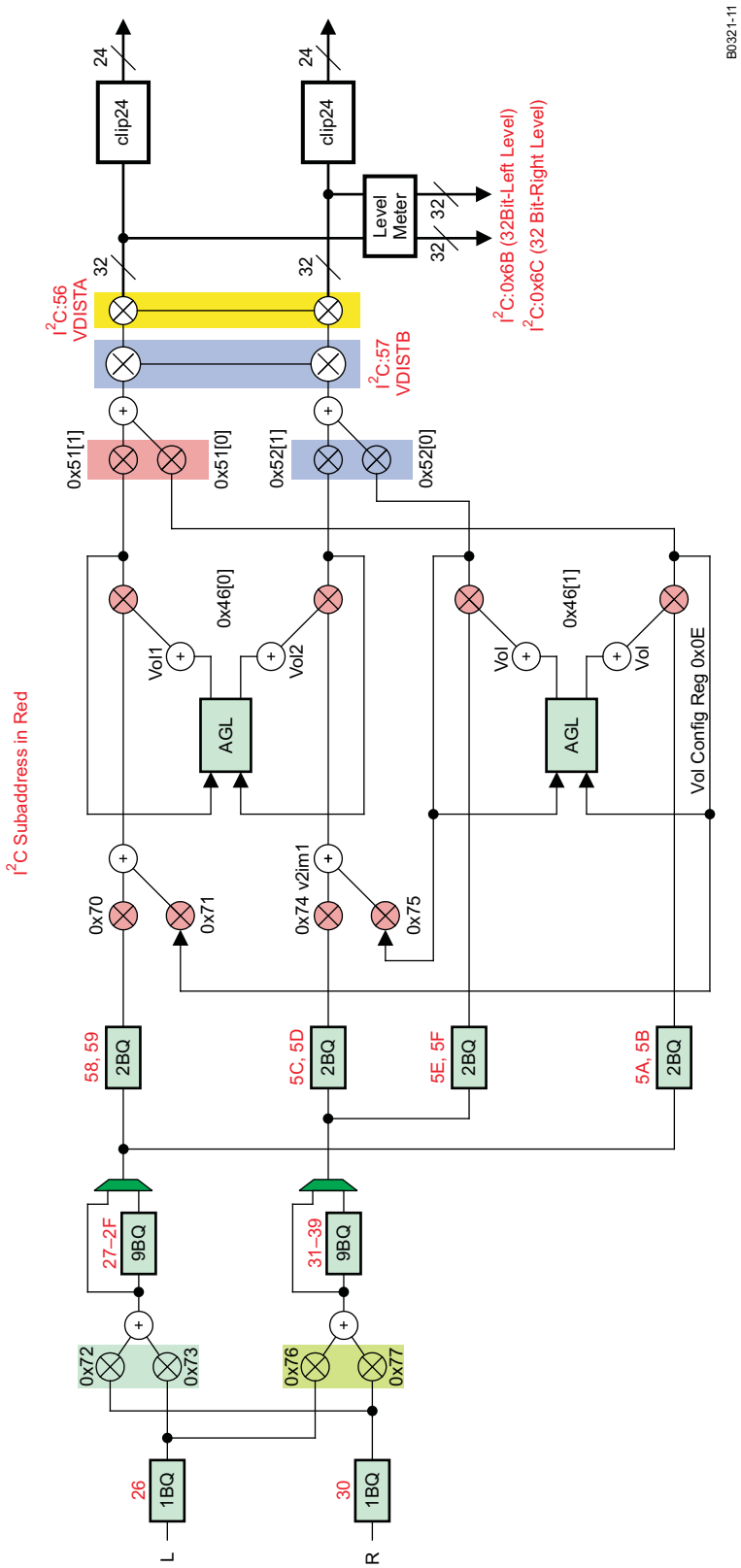

Figure 6. Process Structure

Copyright © 2010, Texas Instruments Incorporated

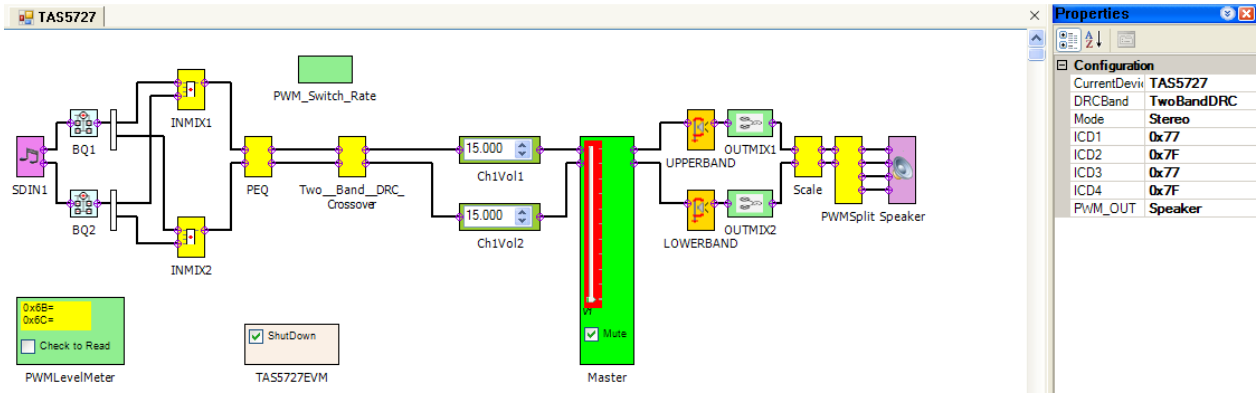

Figure 7. Main GUI Display

3 Using the EVM Software

3.1 Connect the GUI to the EVM

Open the GUI by clicking Start → All Programs → Texas Instruments Inc → TAS57x → TAS57x GUI. Connect the MC57xxPSIA board (attached to the TAS5717EVM) to your PC with a USB cable. In the Properties window, select 1-band or 2-band DRC and select Stereo or Woofer. Stereo is selected for BTL and Woofer is selected for PBTL Mode.

The master volume is muted by default. Select the master volume block. Type the required volume in the Properties window.

Connect the GUI to the EVM hardware by clicking Target → Connect. This sends the initialization commands to the device. Un-check Shutdown and Mute. At this time, if connected properly, audio plays through the device. When the Connect command is issued, if an error appears indicating a USB problem, check the connections, and press the USB RESET button on the controller board. Then disconnect and re-connect from the Target menu.

3.2 I²C Memory Tool

This tool can be opened from GDE (Tools → I²C Memory Tool) or independent of GDE from Start → Program → Texas Instruments Inc → Memory Tool.

Select I²C as shown in Figure 8.

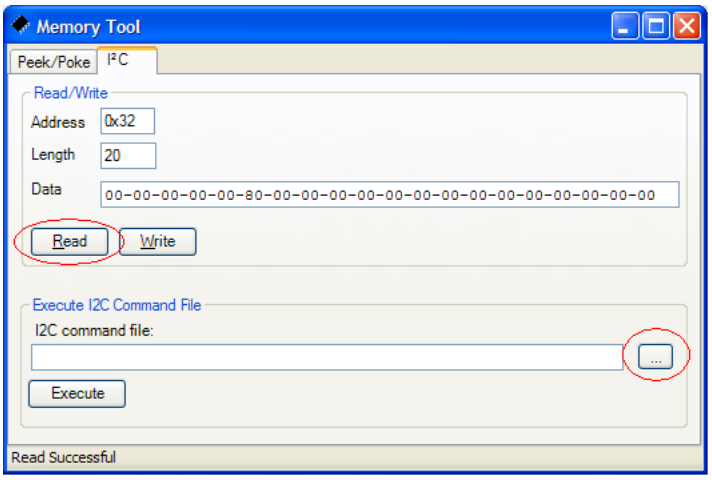

Figure 8. Memory Tool Window

Copyright © 2010, Texas Instruments Incorporated

I²C registers can be written or read using this tool. The I²C command file can be sent by selecting the command file and *Execute* command.

3.3 Volume Function

The Individual and Master volume can be selected, and the required volume value can be entered in the Properties window after selecting the function with the mouse (see Figure 9).

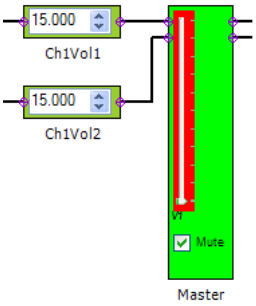

Figure 9. Volume Control

3.4 Biquad GUI

Using the left mouse button, select the PEQ block. In the Properties window, change BiQuadSrc to BIQUAD GUI. Then double-click on the PEQ block as shown in Figure 10. The Biquad GUI window will pop up (Figure 11).

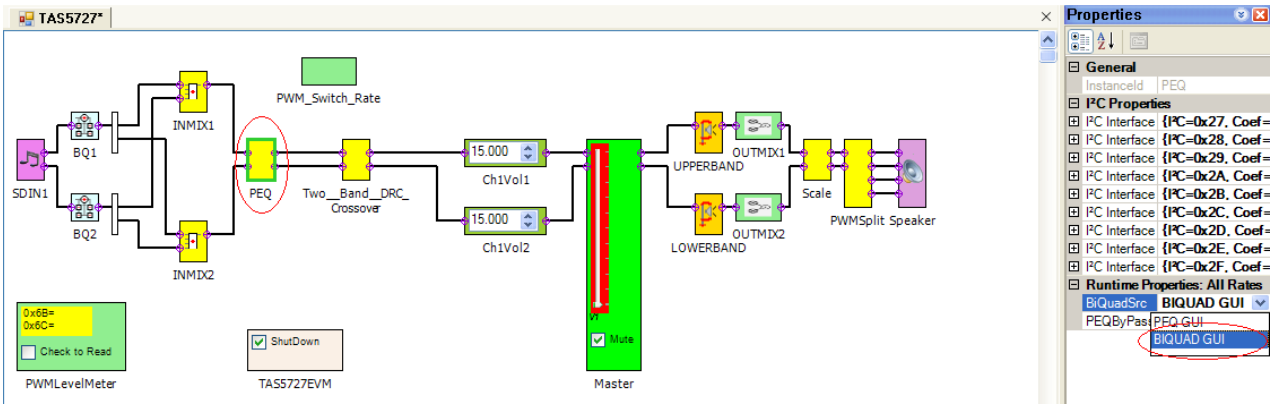

Figure 10. Selecting Biquad GUI

Copyright © 2010, Texas Instruments Incorporated

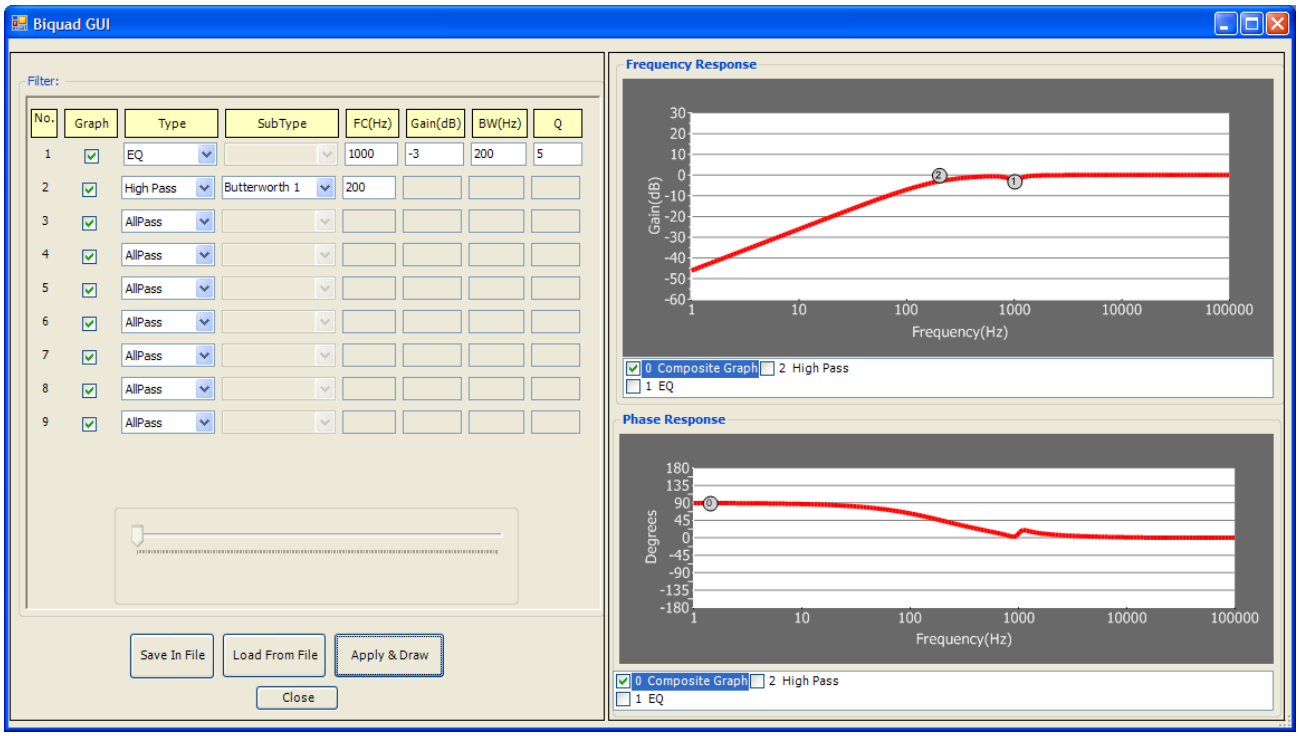

Figure 11. Biquad GUI Window

A check mark selects the Biquad. If not selected, the Biquad is in ALL PASS Mode.

The frequency response and phase response plots for the current settings can be viewed and adjusted in the Frequency Response and Phase Response panes of the Biquad GUI as shown in Figure 11. The individual Biquad gains must be within ±12db.

Clicking the **Apply** & **Draw** button sends all three banks of coefficients to the Frequency Response and Phase response plots (providing auto bank is enabled).

3.5 DRC GUI

The TAS5727 supports 1-band and 2-band DRC. Select one of the DRC modes from the Properties window. Then set the DRC threshold for each band by double-clicking the UPPERBAND or LOWERBAND block and adjusting the sliders as shown in Figure 12.

Copyright © 2010, Texas Instruments Incorporated

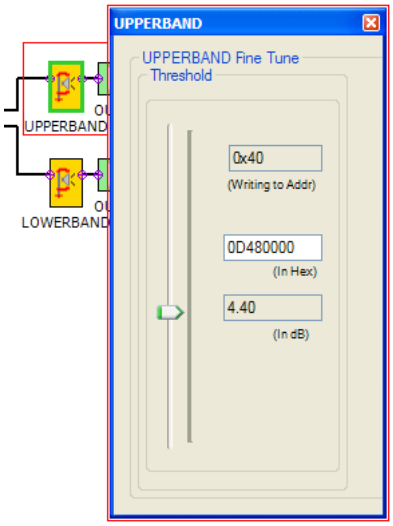

Figure 12. DRC Options

The crossover frequency for the 2-band DRC by default is 300Hz. This can be modified by entering a new value in the property window.

The DRC rates for the softening filter, attack, and release can also be adjusted. To set these rates, first click on the UPPERBAND or LOWERBAND block. Second, set the RateSliders property to On for that block. Third, double-click on the block to bring up an advanced DRC options window, as shown in Figure 13.

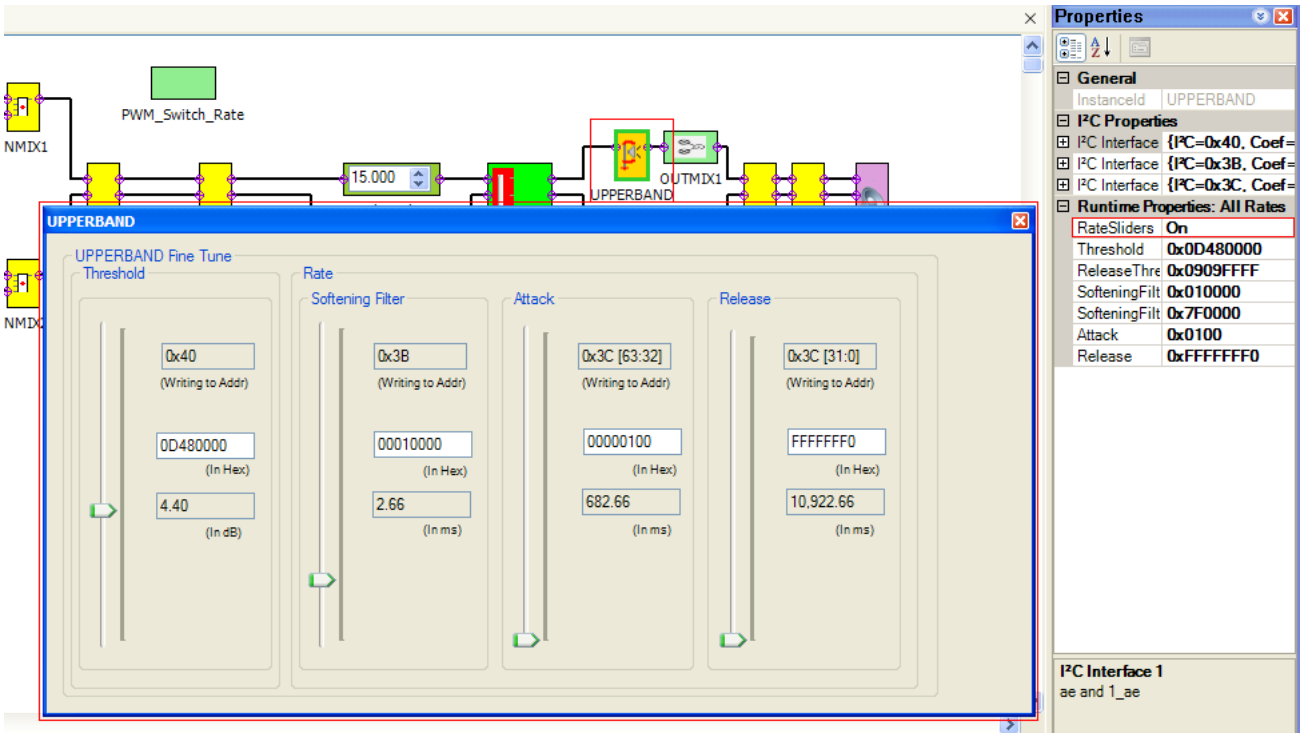

Figure 13. Advanced DRC Options

PBTL Mode: To run the device in PBTL Mode, the PBTL pin must be driven high. Then in the GUI, select woofer instead of stereo (stereo is the default value). The source for PBTL is selected as (L+R)/2, but that be changed by updating input mixer values.

Copyright © 2010, Texas Instruments Incorporated

3.5.1 MODULATION SCHEMES

Using The FAULT PIN As An Error Indicator:

The A_SEL_FAULTZ pin is the I^2C device address select by default. To re-define this pin as an output, write '1' to bit D1 of reg 0X05. Once re-programmed as output, this pin indicates a fault condition. Output will go low for Overcurrent (OC) or undervoltage (UVP) error or overtemperature error (OTE) or overvoltage error

Common Configurations:

1. 2 × BTL BD Mode
2. 2 × BTL AD Mode

Note:

AD: AD Modulation-Outputs are 180° out of phase

BD: BD Modulation

BTL: Bridge-Tied Load

3.5.1.1 2 X BTL BD (BD mode)

1. Set up the hardware.
2. Select the Input MUX from GDE. In the Properties window, select BD Mode.
3. GDE: **Target** > **Connect**.
4. Finally uncheck the **shutdown** box to bring the device out of Shutdown mode, and adjust the **Master Volume** as desired.

3.5.1.2 2 X BTL AD (Default: AD mode)

1. Set up the hardware.
2. Select the Input MUX from GDE. In the Properties window, select AD Mode.
3. GDE: **Target** > **Connect**.
4. Finally uncheck the **shutdown** box to bring the device out of Shutdown mode, and adjust the **Master Volume** as desired.

Copyright © 2010, Texas Instruments Incorporated

4 Jumpers and Control Utilities on MC57xxPSIA board

4.1 RCA/OPTICAL Jumpers

Select the jumper to reflect the source whether it is RCA or OPTICAL.

4.2 Switches

JP1 on the daughter card is for PBTL select. Jumper IN means non-PBTL mode. For PBTL, remove this jumper.

Reset is an active-low function. Pressing the master reset switch (S2) resets the TAS5727 device; USB RESET (S1) resets the USB bus. Pressing PDNZ (S4) powers down the TAS5727, and pressing MUTE (S5) mutes (volume mute) the TAS5727.

4.3 LED Indicators

LED1 : USB Power connector installed at J1

LED2 : 3.3V Power is valid

LED3: RCA connection made

LED4: Optical connection made

LED5: SPDIF signal locked

LED6: FAULT (**This LED should be ignored until FAULT is programmed to be an output via I^2C write to reg 0X05.**)

LED7: PDN switch (S4) is pressed (closed)

Copyright © 2010, Texas Instruments Incorporated

5 Board Layouts, Bill of Materials, and Schematic

5.1 TAS5727EVM and MC57xxPSIA Board Layouts

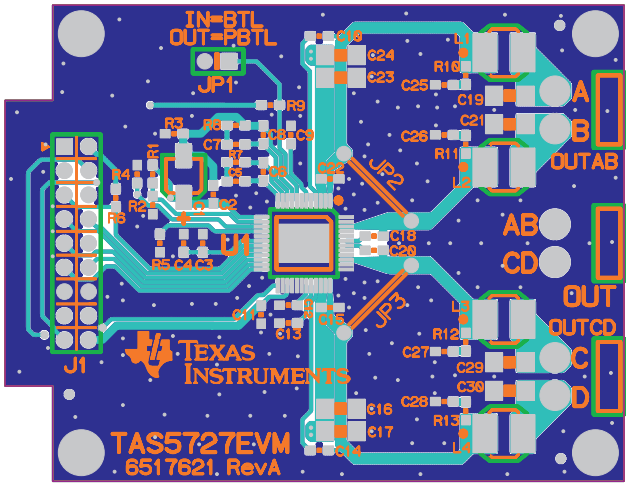

Figure 14. TAS5727EVM Top Composite Assembly

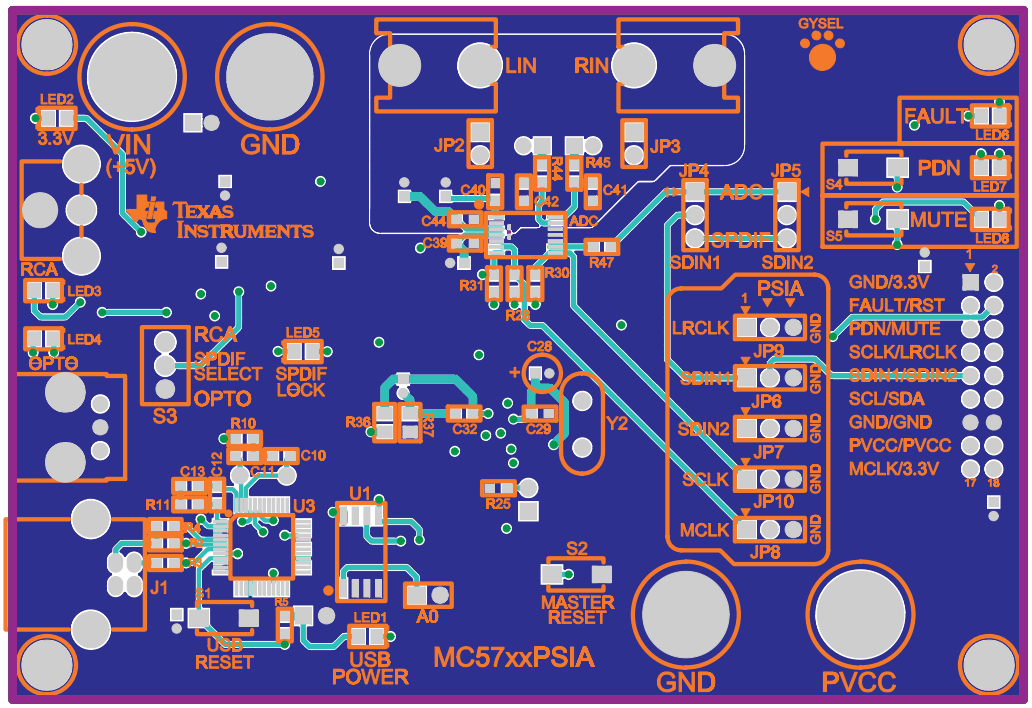

Figure 15. MC57xxPSIA Top Composite Assembly

Copyright © 2010, Texas Instruments Incorporated

5.2 Bill of Materials

Table 2. Bill of Materials for TAS5727EVM

Manufacturer Part No.	Qty	Ref Des	Vendor Part No.	Description	Vendor	Manufacturer
TI-SEMICONDUCTORS						
TAS5727PHP	1	U1	TAS5727PHP	20W DIGAMP WITH DAP HTQFP48-PHP ROHS	TEXAS INSTRUMENTS	TEXAS INSTRUMENTS
CAPACITORS						
GRM1885C1H331JA01D	4	C25, C26, C27, C28	490-1439-1	CAP SMD0603 CERM 330PFD 50V 5% COG ROHS	DIGI-KEY	MURATA
GRM188R71H222KA01D	1	C9	490-1500-1	CAP SMD0603 CERM 2200PFD 50V 10% X7R ROHS	DIGI-KEY	MURATA
GRM188R71H472KA01D	2	C6, C8	490-1506-1	CAP SMD0603 CERM 4700PFD 50V 10% X7R ROHS	DIGI-KEY	MURATA
GRM188R71H333KA61D	4	C10, C14, C18, C20	490-3286-1	CAP SMD0603 CERM 0.033UFD 50V 10% X7R ROHS	DIGI-KEY	MURATA
GRM188R71C473KA01D	2	C5, C7	490-1529-1	CAP SMD0603 CERM 0.047UFD 16V 10% ROHS	DIGI-KEY	MURATA
C0603C104K8RACTU	4	C2, C4, C11, C12	399-1095-1	CAP SMD0603 CERM 0.1UFD 10V 5% X7R ROHS	DIGI-KEY	KEMET
GRM188R71H104KA93D	2	C15, C22	490-1519-1	CAP SMD0603 CERM 0.1UFD 50V 10% X7R ROHS	DIGI-KEY	MURATA
TMK107BJ105KA	1	C13	587-1248-1	CAP SMD0603 CERM 1.0UFD 25V 10% X5R ROHS	DIGI-KEY	TAIYO YUDEN
C1206C684K5RACTU	4	C19, C21, C29, C30	445-4013-1	CAP SMD1206 CERM 0.68UFD 50V 10% X7R ROHS	DIGI-KEY	TDK
C1608X5R0J475M	1	C3	445-1417-1	CAP SMD603 CERM 4.7UFD 6.3V 20% X5R ROHS	DIGI-KEY	TDK
EEE1CA100SR	1	C1	PCE3878CT	CAP SMD ELECT 10ufd 16V 20% VS-B ROHS	DIGI-KEY	PANASONIC
TMK316B7106KL-TD	4	C16, C17, C23, C24	587-2399-1	CAP SMD1206 CERM 10UFD 25V 10% X7R ROHS	DIGI-KEY	TAIYO YUDEN
RESISTORS						
ERJ-3GEY0R00V	1	R3	P0.0GCT	RESISTOR SMD0603 0.0 OHM 5% THICK FILM 1/10W ROHS	DIGI-KEY	PANASONIC
ERJ-3GEYJ180V	4	R10, R11, R12, R13	P18GCT	RESISTOR SMD0603 18 OHMS 5% 1/10W ROHS	DIGI-KEY	PANASONIC
ERJ-3GEYJ471V	2	R7, R8	P470GCT	RESISTOR SMD0603 470 OHMS 5% 1/10W ROHS	DIGI-KEY	PANASONIC
ERJ-3EKF1002V	3	R4, R6, R9	P10.0KHCT	RESISTOR SMD0603 10.0K 1% THICK FILM 1/10W ROHS	DIGI-KEY	PANASONIC
RMCF0603FT15K0	2	R2	RMCF0603FT15K 0CT	RESISTOR SMD0603 15.0K OHMS 1% 1/10W ROHS	DIGI-KEY	STACKPOLE ELECTRONICS
RC0603FR-0718K2L	1	R5	311-18.2KHRCT	RESISTOR SMD0603 THICK FILM 18.2K 1% 1/10W ROHS	DIGI-KEY	YAGEO
INDUCTORS						
DG6045C-150M	4	L1, L2, L3, L4	DG6045C-150M	INDUCTOR SMT 15uH X.XA X.X mOHMS 20% DG6045C ROHS	TOKO JAPAN	TOKO JAPAN
HEADERS AND JACKS						
PBC02SAAN	1	JP1	S1011E-02	HEADER THRU MALE 2 PIN 100LS GOLD ROHS	DIGI-KEY	SULLINS
PBC09DAAN	1	J1	S2011E-09	HEADER THRU MALE 2X9 100LS GOLD ROHS	DIGI-KEY	SULLINS
B2PS-VH(LF)(SN)	3	OUT, OUTAB, OUTCD	455-1648	JACK JST-VH RA 2-PIN 3.96mmLS ROHS	DIGI-KEY	JST
SHUNTS						
SPC02SYAN	1	JP1(2-3)	S9001	SHUNT, BLACK AU FLASH 0.100LS	DIGI-KEY	SULLINS
STANDOFFS, HARDWARE, WIRE						
PMS 440 0025 PH	4	NA	H342	4-40 SCREW, STEEL 0.250 IN	DIGI-KEY	BUILDING FASTENERS
2029	4	NA	2029K	STANDOF ,4-40 0.75IN 3/16IN DIA ALUM RND F-F	DIGI-KEY	KEYSTONE ELECTRONICS
C2040V-100	2	JP1	C2040V-100	WIRE GRAY STRANDED 20AWG 20mm LENGTH ROHS	DIGI-KEY	GENERAL CABLE
Component Count:	63					

Copyright © 2010, Texas Instruments Incorporated

5.3 Schematics

The schematic for TAS5727EVM follows. The schematics for MC57xxPSIA appear on the following pages.

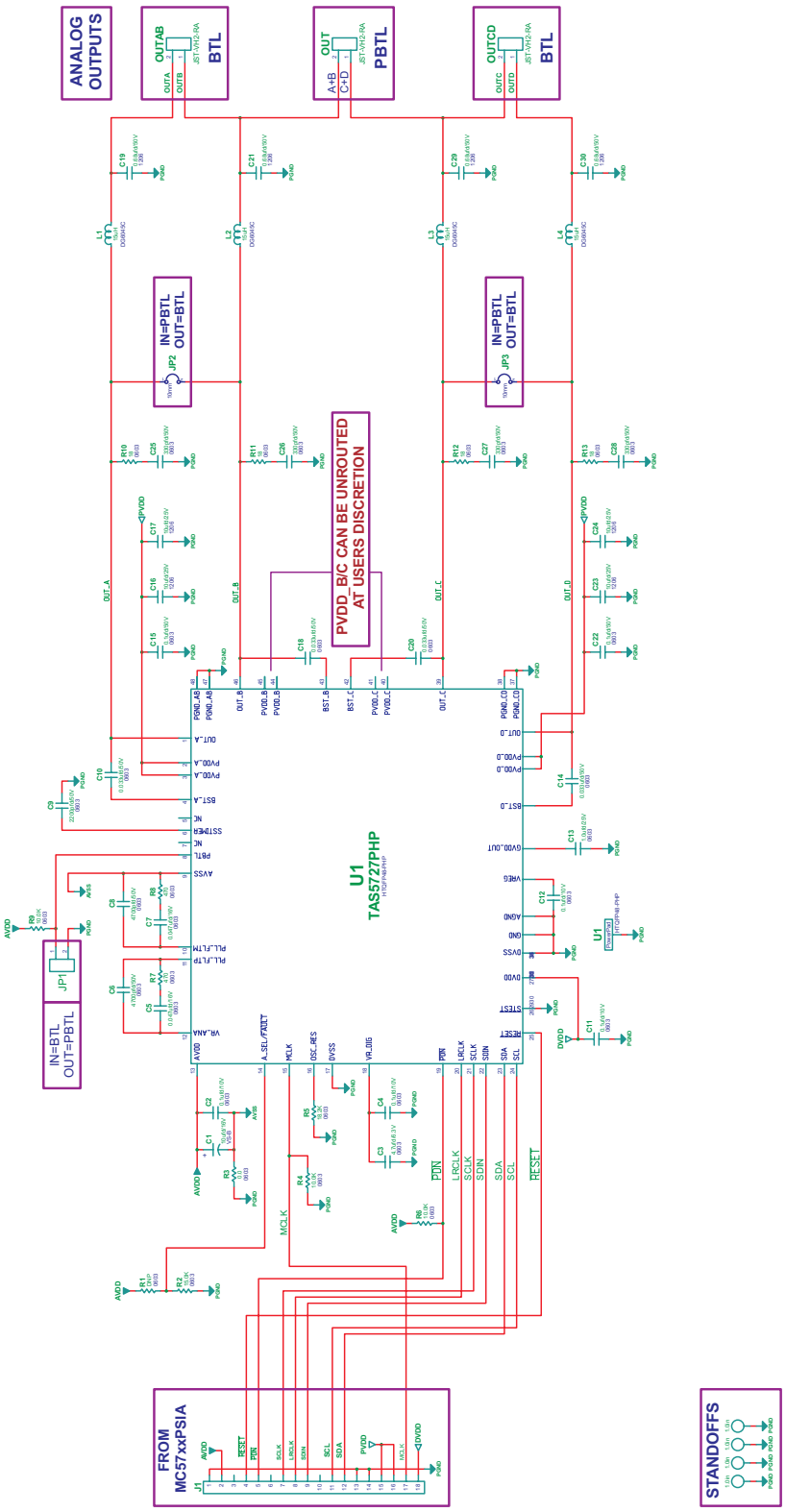

Copyright © 2010, Texas Instruments Incorporated

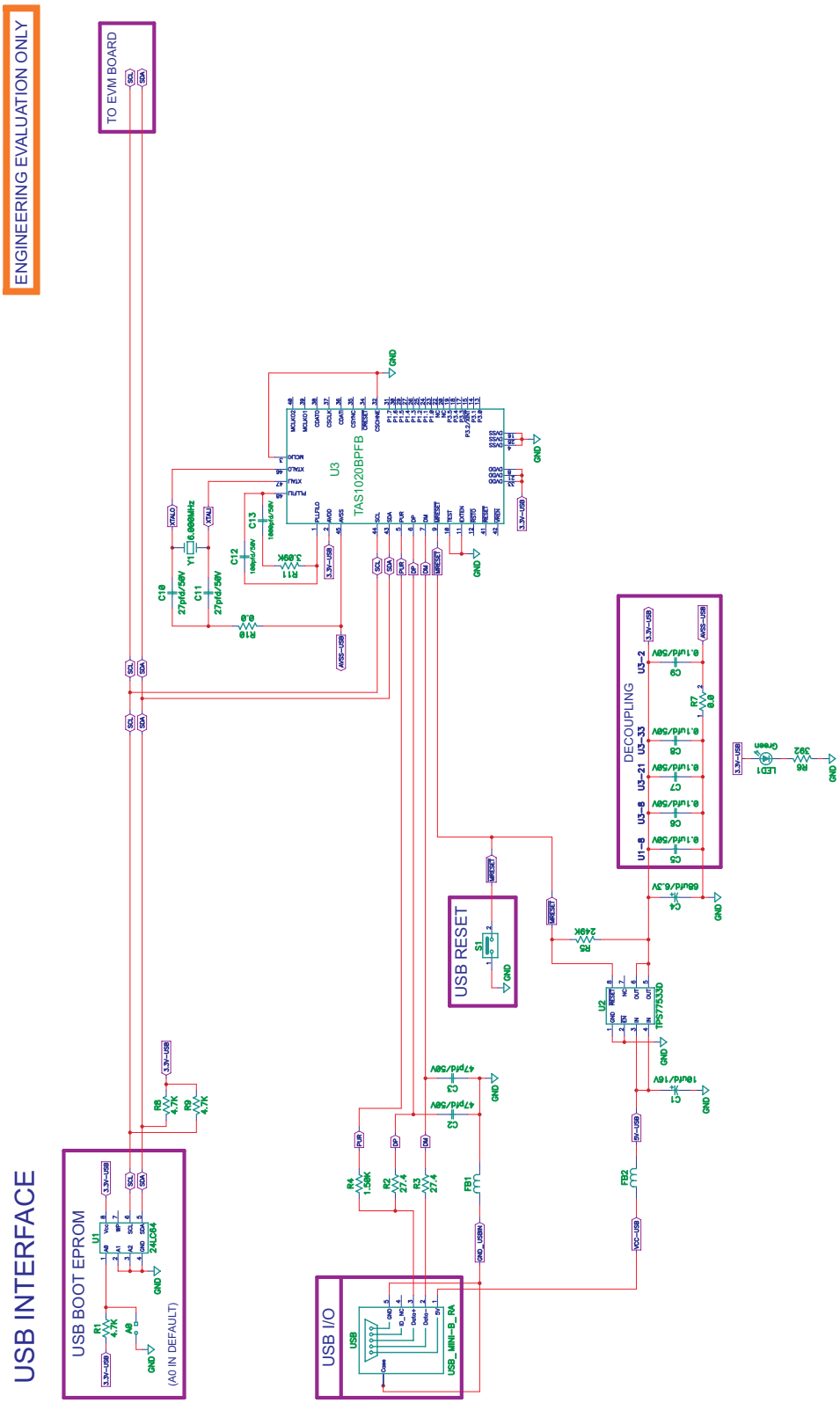

Copyright © 2010, Texas Instruments Incorporated

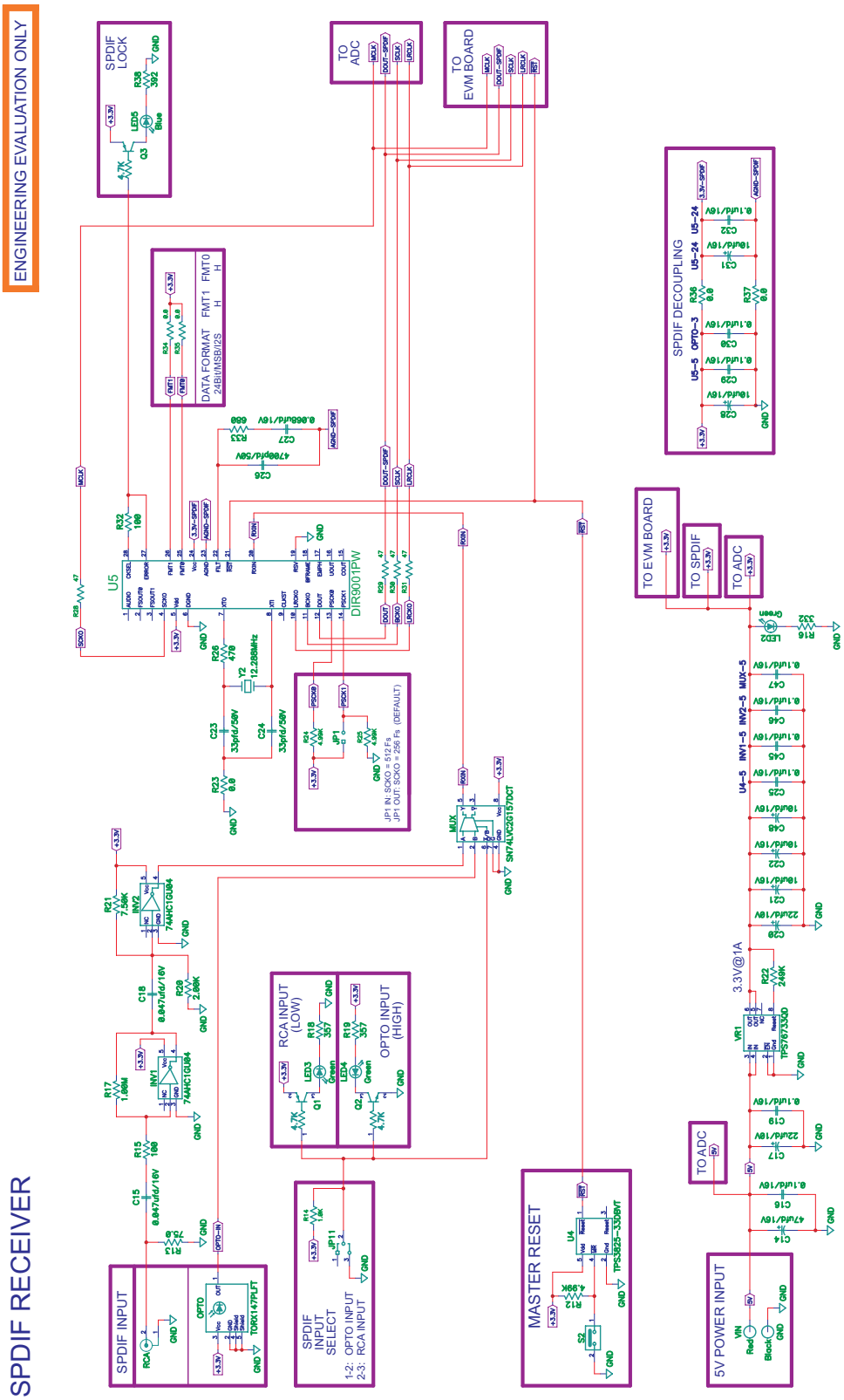

Copyright © 2010, Texas Instruments Incorporated

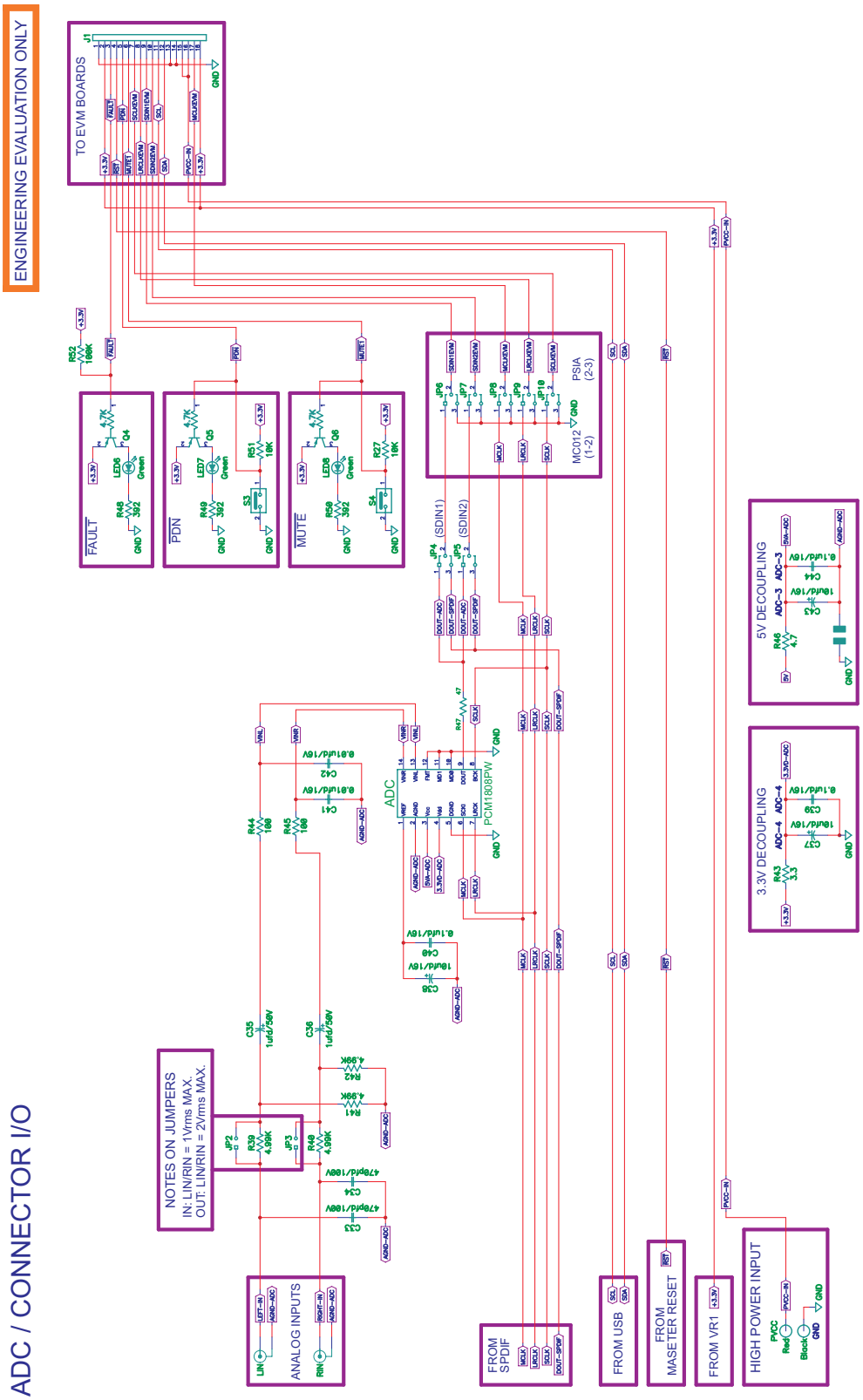

Copyright © 2010, Texas Instruments Incorporated

EVALUATION BOARD/KIT IMPORTANT NOTICE

Texas Instruments (TI) provides the enclosed product(s) under the following conditions:

This evaluation board/kit is intended for use for **ENGINEERING DEVELOPMENT, DEMONSTRATION, OR EVALUATION PURPOSES ONLY** and is not considered by TI to be a finished end-product fit for general consumer use. Persons handling the product(s) must have electronics training and observe good engineering practice standards. As such, the goods being provided are not intended to be complete in terms of required design-, marketing-, and/or manufacturing-related protective considerations, including product safety and environmental measures typically found in end products that incorporate such semiconductor components or circuit boards. This evaluation board/kit does not fall within the scope of the European Union directives regarding electromagnetic compatibility, restricted substances (RoHS), recycling (WEEE), FCC, CE or UL, and therefore may not meet the technical requirements of these directives or other related directives.

Should this evaluation board/kit not meet the specifications indicated in the User's Guide, the board/kit may be returned within 30 days from the date of delivery for a full refund. THE FOREGOING WARRANTY IS THE EXCLUSIVE WARRANTY MADE BY SELLER TO BUYER AND IS IN LIEU OF ALL OTHER WARRANTIES, EXPRESSED, IMPLIED, OR STATUTORY, INCLUDING ANY WARRANTY OF MERCHANTABILITY OR FITNESS FOR ANY PARTICULAR PURPOSE.

The user assumes all responsibility and liability for proper and safe handling of the goods. Further, the user indemnifies TI from all claims arising from the handling or use of the goods. Due to the open construction of the product, it is the user's responsibility to take any and all appropriate precautions with regard to electrostatic discharge.

EXCEPT TO THE EXTENT OF THE INDEMNITY SET FORTH ABOVE, NEITHER PARTY SHALL BE LIABLE TO THE OTHER FOR ANY INDIRECT, SPECIAL, INCIDENTAL, OR CONSEQUENTIAL DAMAGES.

TI currently deals with a variety of customers for products, and therefore our arrangement with the user **is not exclusive.**

TI assumes **no liability for applications assistance, customer product design, software performance, or infringement of patents or services described herein.**

Please read the User's Guide and, specifically, the Warnings and Restrictions notice in the User's Guide prior to handling the product. This notice contains important safety information about temperatures and voltages. For additional information on TI's environmental and/or safety programs, please contact the TI application engineer or visit www.ti.com/esh.

No license is granted under any patent right or other intellectual property right of TI covering or relating to any machine, process, or combination in which such TI products or services might be or are used.

FCC Warning

This evaluation board/kit is intended for use for **ENGINEERING DEVELOPMENT, DEMONSTRATION, OR EVALUATION PURPOSES ONLY** and is not considered by TI to be a finished end-product fit for general consumer use. It generates, uses, and can radiate radio frequency energy and has not been tested for compliance with the limits of computing devices pursuant to part 15 of FCC rules, which are designed to provide reasonable protection against radio frequency interference. Operation of this equipment in other environments may cause interference with radio communications, in which case the user at his own expense will be required to take whatever measures may be required to correct this interference.

EVM WARNINGS AND RESTRICTIONS

It is important to operate this EVM within the input voltage range of -0.5V to 4.1V and the output voltage range of 26Vp-p.

Exceeding the specified input range may cause unexpected operation and/or irreversible damage to the EVM. If there are questions concerning the input range, please contact a TI field representative prior to connecting the input power.

Applying loads outside of the specified output range may result in unintended operation and/or possible permanent damage to the EVM. Please consult the EVM User's Guide prior to connecting any load to the EVM output. If there is uncertainty as to the load specification, please contact a TI field representative.

During normal operation, some circuit components may have case temperatures greater than 85°C. The EVM is designed to operate properly with certain components above 85°C as long as the input and output ranges are maintained. These components include but are not limited to linear regulators, switching transistors, pass transistors, and current sense resistors. These types of devices can be identified using the EVM schematic located in the EVM User's Guide. When placing measurement probes near these devices during operation, please be aware that these devices may be very warm to the touch.

Mailing Address: Texas Instruments, Post Office Box 655303, Dallas, Texas 75265
Copyright © 2008-2009, Texas Instruments Incorporated

IMPORTANT NOTICE

Texas Instruments Incorporated and its subsidiaries (TI) reserve the right to make corrections, modifications, enhancements, improvements, and other changes to its products and services at any time and to discontinue any product or service without notice. Customers should obtain the latest relevant information before placing orders and should verify that such information is current and complete. All products are sold subject to TI's terms and conditions of sale supplied at the time of order acknowledgment.

TI warrants performance of its hardware products to the specifications applicable at the time of sale in accordance with TI's standard warranty. Testing and other quality control techniques are used to the extent TI deems necessary to support this warranty. Except where mandated by government requirements, testing of all parameters of each product is not necessarily performed.

TI assumes no liability for applications assistance or customer product design. Customers are responsible for their products and applications using TI components. To minimize the risks associated with customer products and applications, customers should provide adequate design and operating safeguards.

TI does not warrant or represent that any license, either express or implied, is granted under any TI patent right, copyright, mask work right, or other TI intellectual property right relating to any combination, machine, or process in which TI products or services are used. Information published by TI regarding third-party products or services does not constitute a license from TI to use such products or services or a warranty or endorsement thereof. Use of such information may require a license from a third party under the patents or other intellectual property of the third party, or a license from TI under the patents or other intellectual property of TI.

Reproduction of TI information in TI data books or data sheets is permissible only if reproduction is without alteration and is accompanied by all associated warranties, conditions, limitations, and notices. Reproduction of this information with alteration is an unfair and deceptive business practice. TI is not responsible or liable for such altered documentation. Information of third parties may be subject to additional restrictions.

Resale of TI products or services with statements different from or beyond the parameters stated by TI for that product or service voids all express and any implied warranties for the associated TI product or service and is an unfair and deceptive business practice. TI is not responsible or liable for any such statements.

TI products are not authorized for use in safety-critical applications (such as life support) where a failure of the TI product would reasonably be expected to cause severe personal injury or death, unless officers of the parties have executed an agreement specifically governing such use. Buyers represent that they have all necessary expertise in the safety and regulatory ramifications of their applications, and acknowledge and agree that they are solely responsible for all legal, regulatory and safety-related requirements concerning their products and any use of TI products in such safety-critical applications, notwithstanding any applications-related information or support that may be provided by TI. Further, Buyers must fully indemnify TI and its representatives against any damages arising out of the use of TI products in such safety-critical applications.

TI products are neither designed nor intended for use in military/aerospace applications or environments unless the TI products are specifically designated by TI as military-grade or "enhanced plastic." Only products designated by TI as military-grade meet military specifications. Buyers acknowledge and agree that any such use of TI products which TI has not designated as military-grade is solely at the Buyer's risk, and that they are solely responsible for compliance with all legal and regulatory requirements in connection with such use.

TI products are neither designed nor intended for use in automotive applications or environments unless the specific TI products are designated by TI as compliant with ISO/TS 16949 requirements. Buyers acknowledge and agree that, if they use any non-designated products in automotive applications, TI will not be responsible for any failure to meet such requirements.

Following are URLs where you can obtain information on other Texas Instruments products and application solutions:

Products		**Applications**	
Audio	www.ti.com/audio	Communications and Telecom	www.ti.com/communications
Amplifiers	amplifier.ti.com	Computers and Peripherals	www.ti.com/computers
Data Converters	dataconverter.ti.com	Consumer Electronics	www.ti.com/consumer-apps
DLP® Products	www.dlp.com	Energy and Lighting	www.ti.com/energy
DSP	dsp.ti.com	Industrial	www.ti.com/industrial
Clocks and Timers	www.ti.com/clocks	Medical	www.ti.com/medical
Interface	interface.ti.com	Security	www.ti.com/security
Logic	logic.ti.com	Space, Avionics and Defense	www.ti.com/space-avionics-defense
Power Mgmt	power.ti.com	Transportation and Automotive	www.ti.com/automotive
Microcontrollers	microcontroller.ti.com	Video and Imaging	www.ti.com/video
RFID	www.ti-rfid.com	Wireless	www.ti.com/wireless-apps
RF/IF and ZigBee® Solutions	www.ti.com/lprf		

TI E2E Community Home Page e2e.ti.com

Mailing Address: Texas Instruments, Post Office Box 655303, Dallas, Texas 75265
Copyright © 2011, Texas Instruments Incorporated